Hennecke GROUP

360° service

360° SERVICE

Tips and Tricks Slabstock

>> Useful information on application technology

CONTENTS

Foreword 3

Tips & tricks for products
Injector selection charts 5
Injector selection table 6
Stirrer systems 8
NOVAFLEX® technology 6

Tips & tricks for applications
Cell control 10
Fall plate section settings 13
Flat-Top system settings 14

Tips & tricks for chemicals
Formulae 15

Spare part packages for production stability 16

Typical retrofit packages and innovations 18

Hennecke GROUP´s 360°SERVICE 26

FOREWORD

Based on 160 years' combined experience, the core brands of the Hennecke GROUP produce high-quality machines, plants and systems for a wide portfolio of technologies for polyurethane processing. With us, users around the world achieve high-quality and efficient production results. The same applies when it comes to getting the right support for your production lines or providing your staff with qualified training.

Our 360°SERVICE offers customers a variety of services at competitive prices. Each user has access to a tailor-made package of suitable measures to ensure maximum plant availability and uptime. Does your company use machine and plant technology from Hennecke Polyurethane Technology, HENNECKE-OMS or Hennecke Roll Forming Technology? Why not opt for maximum support? This ensures that your machine or plant will be in top operational condition for a long time to come.

To support you in the daily challenges of slabstock production, we have put together this booklet containing extensive advice and helpful tips about chemicals, process technology and technical news. All figures and data refer to the plant systems UBT, QFM, MULTIFLEX and SMARTFLEX.

Combined injector selection chart [input pressure 33 bar]

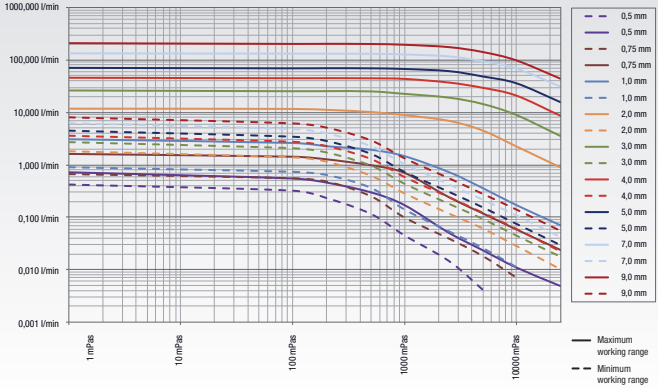

Combined injector selection chart [viscosity 1 mPas]

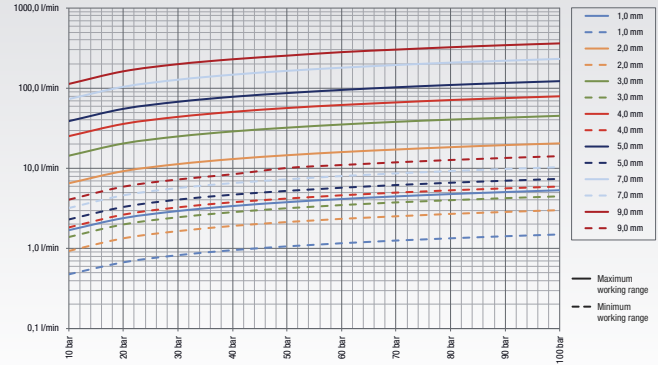

INJECTOR SELECTION TABLE

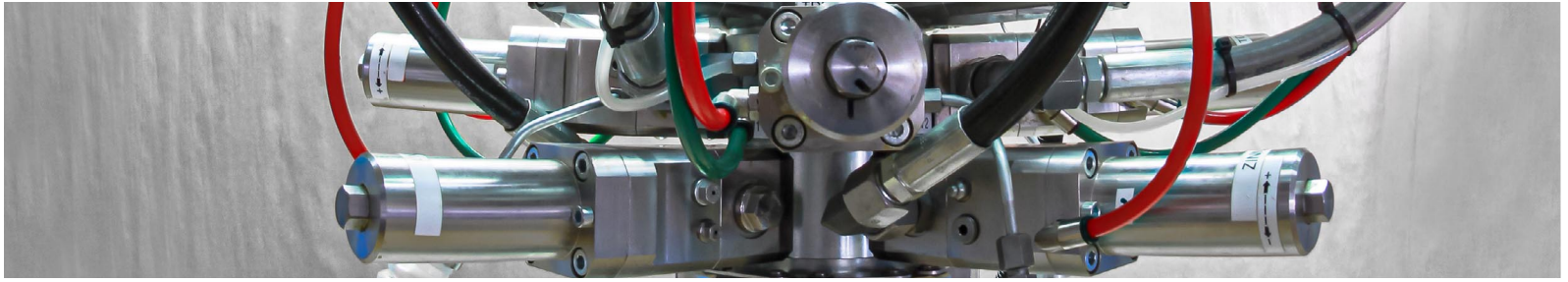

	Adjustable pressure	Easy handling / Maintaining	Energetic locking	Polyol	Isocyanate	Additives, low viscosity / small output	Additives, high viscosity / big output	Colours	CO_2
Ball valve DN 50		✓	✓	✓					
One way valve		●				✓		✓	
L'Orange injector	●				✓	✓			
Rec-Prod-valve	●	✓	✓				✓	✓	
Multifunctional injector	✓	✓	✓		✓	✓		✓	
Hydraulic injector	✓	✓	✓		✓				
Periflex injector	●	●						✓	✓
Pressure relief valve	●	✓							✓

✓ = Available ● = Limited availability

STIRRER SYSTEMS

Screw stirrer

In slabstock processing, the screw stirrer is suitable for ether and ester foams that require mixing under low mixing chamber pressure at the entrance to the mixing chamber, and at the same time a high rotation speed. This stirrer therefore creates an inverted pressure profile: the formulation can thus be homogeneously mixed and particularly pressure-sensitive foams that are largely free of pinholes can be produced.

Pin stirrer

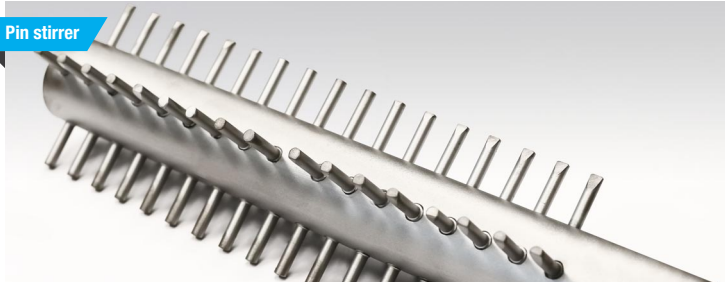

In slabstock processing, the pin stirrer is particularly suitable for ether foams that require vigorous mixing. Homogenous mixing is absolutely imperative for ether foams. When using the pin stirrer, pay attention to the increasing chamber pressure at increasing speed.

NOVAFLEX® TECHNOLOGY

NOVAFLEX® technology is a system for implementing CO_2 and replaces conventional blowing agents such as methylene chloride. The CO_2 results in foam with particularly fine cells and an even hardness and gross density distribution. Hypersoft foams with a low gross density of up to 15 kg/m^3 can be produced in this way. The NOVAFLEX® technology can also be used to achieve product properties such as the soft-touch effect. The set-up time for retrofitting the NOVAFLEX® equipment is only a few minutes. The additional NOVAFLEX® Multifill allows solid material such as melamine or calcium carbonate to be added. Different formulations, different CO_2 and solid material ratios and different metering outputs as well as solid material additions are all possible with the NOVAFLEX® Multifill.

NOVAFLEX®

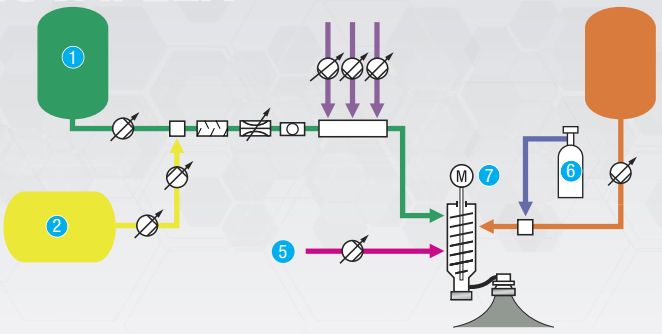

1. Polyol
2. CO_2
3. Isocyanate
4. Additives
5. Tin
6. Nitrogen
7. Mixer with creamer

Gas loading and effects

Please note that a lower gas loading generally provides a coarser cell structure.

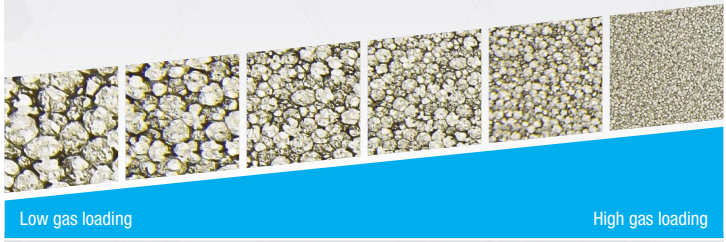

a) The gas loading can be regulated by a special gas loading device or degassing unit. For isocyanate please be aware that due to the low viscosity, the gas can escape more quickly. Whereas for polyol, the gas escapes more slowly, which can lead to the formation of pinholes.

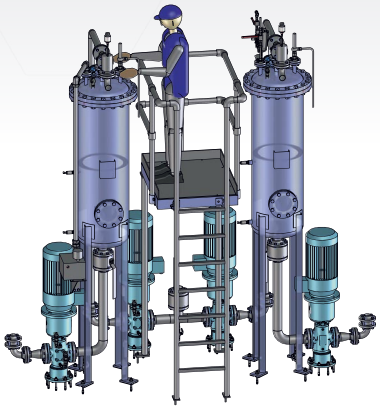

Gas loading and effects

b) In addition, even more gas can be released from the isocyanate through a large jump in pressure (injection pressure approx. 80 bar). A greater number of injectors can help to obtain a better distribution and nucleation of the gas.

c) The atomizing pressure of the isocyanate should be at least 50 bar so that there is sufficient negative pressure and shearing force on the injector. Dissolved gases will thus be released in the form of fine micro bubbles.

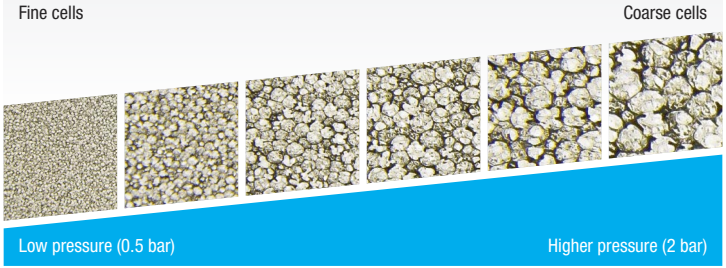

FALL PLATE SECTION SETTINGS

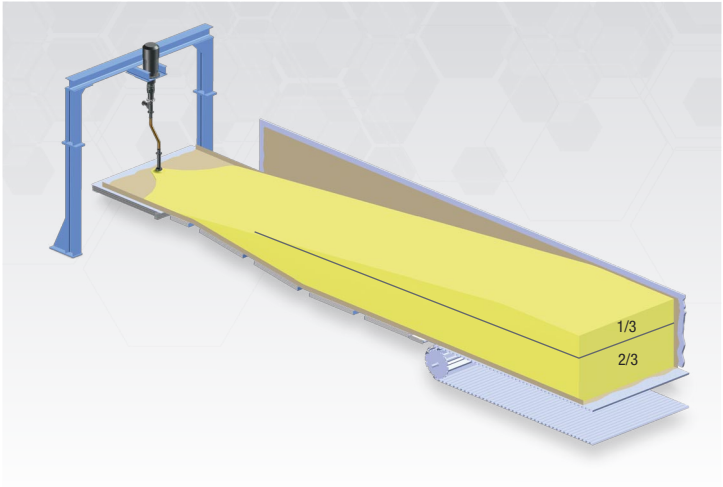

The fall plate section is ideally configured so that the feed table is at a relatively high position to the conveyor, corresponding to approx. two thirds of the foam height. The conveyor speed is selected to ensure that the foam at the end of the fall plate reaches its full height.

The rise plates are configured so that the surface of the foam runs almost linear from the feed table to the full rise position of the foam. It is imperative to avoid trenches forming on the foam surface.

We recommend a linear setting for the fall plates during the first foaming of a new formulation. To prevent the foam from running under the existing foam, the feed table should be positioned slightly lower for the first foaming operation and, if necessary, the first two fall plates should initially be configured slightly lower than the remaining fall plates. If you are already experienced with similar formulations, you can of course use the same settings as for these.

Do not set the fall plate section too steeply. When the first fall plates in particular are too steep, the liquid reaction mixture will run down under the mixture that has already been foamed. For this reason, it is especially important for low viscosity mixtures to deviate from the optimal setting (foaming two thirds downwards and one third upwards).

FLAT-TOP SYSTEM SETTINGS

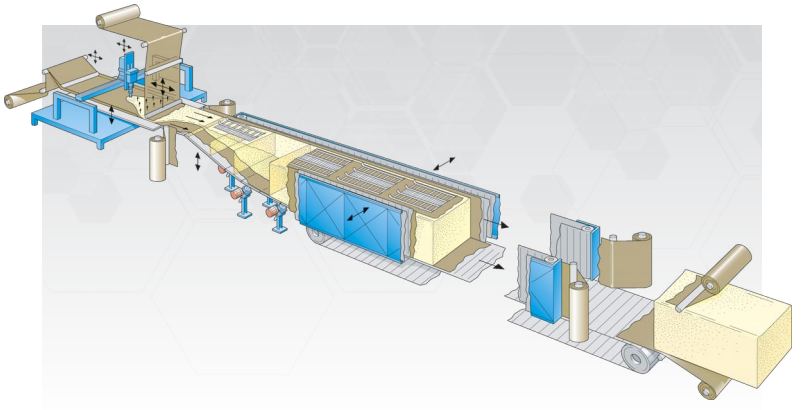

The air shutter must be positioned so that it runs crossways to the foaming direction and parallel to the laydown plate. This creates an even gap between the air shutter and the feed table. In the direction of foaming, the air shutter must be positioned 300 mm behind the mixer outlet.

All mats must be clean and free of PU residues, otherwise the top layer will run. The width of the added top layer should be around 100 mm narrower than the foaming width.

Before production is started, the air shutter is first positioned around 200 mm above the laydown plate. After the bottom conveyor has been started, the air shutter is lowered so that the reaction mixture builds up across the whole foaming width. If the air shutter is lowered too far, excessive build-up will occur which can be seen through a reaction in the mixture in front of the calibration gap. If the position is too high, the air will be drawn in under the top layer, which can create disturbances in the block surface.

While the mats are being laid on the block one after the other, a generally lower contact pressure should initially be set. This can be done via the counterweight or is automated with the new Hennecke AUTOFLAT Flat-Top system. If the contact pressure is too high, the reaction mixture will rise over the edge of the top layer and cracks may occur inside the block. If the contact pressure is too low, the optimum rectangular effect will not be achieved and this will have a negative effect on material savings. The discharge position in the foaming direction can be moved by adjusting the reaction activation and the conveyor speed. This position should always be behind the last fall plate, otherwise mechanical cracks may appear in the lower part of the block.

FORMULAE

Calculation formula for isocyanate part

OH number (polyol) x 0.155 = X

X + OH number = TDI (isocyanate) part

TDI part x index = Total TDI (isocyanate)

1 part water binds 9.67 parts isocyanate

Example:

OH number = 44; H2O = 4.7

44 x 0.155 = 6.82

9.67 x 4.7 = 45.45 isocyanate part

45.45 + 6.82 = 52.27 isocyanate part

With INDEX (figure) e.g. 1.44 (52.27 x 1.14) = 59.59 total isocyanate

Calculation formula for density

Total kg / output

m/min x block width x block height

Example: 240 kg

5m/min = 48 kg/m

48 kg/m : 1.85m x 1.20 m = 21.6 kg/m^3

SPARE PART PACKAGES FOR PRODUCTION STABILITY

PS We put great emphasis on **production stability** and therefore we recommend storing parts that may change due to market trends and need to be modified. The aim is to prevent production downtimes and unplanned production outages by keeping older and expiring parts in reserve.

MU **Maintenance units** are parts that should be replaced in sporadical intervals but would only pose a limited risk to maintaining production. This includes parts which you ideally keep in storage in the medium-term to avoid long periods of production downtime.

METERING SECTION

Item	Product	Pict.	Module	PS	MU	WP
1	Pump		Complete pump Pump repair set	x		 x
2	Valves		Complete valve		x	
3	Magnetic coupling		Complete coupling	x		

CONTROL SYSTEM

Item	Product	Pict.	Module	PS	MU	WP
1	RACK IPC RACK IPC		Win7® Win10®	x	 x	
2	Control system		PLC Relay Switch Fuses	x		 x x x
3	Sensors		Measuring transformer Gear counter		x x	

WP **Wear parts** are generally repair or C-class replacement modules that are a quick and effective solution for self-repair or restoration of individual machine components. With these parts you can keep your machines operational at short notice and prevent production downtimes.

PORTAL

Item	Product	Pict.	Module	PS	MU	WP
1	Mixer	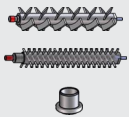	Screw stirrer Pin stirrer Seals Storage		x x x	 x
2	Valve terminal		Valve terminal	x		
3	Injectors		Complete injectors Injector modules		x 	 x

MACHINE SERVICING

Item	Product	Pict.	Module	PS	MU	WP
1	Exchange sets		Hose packet Sieves Filter		x 	 x x
2	Chemicals		Cold-cleaning agent Mesamol Med. white oil Anhydrous Vaseline			x x x x

TYPICAL RETROFIT PACKAGES AND INNOVATIONS

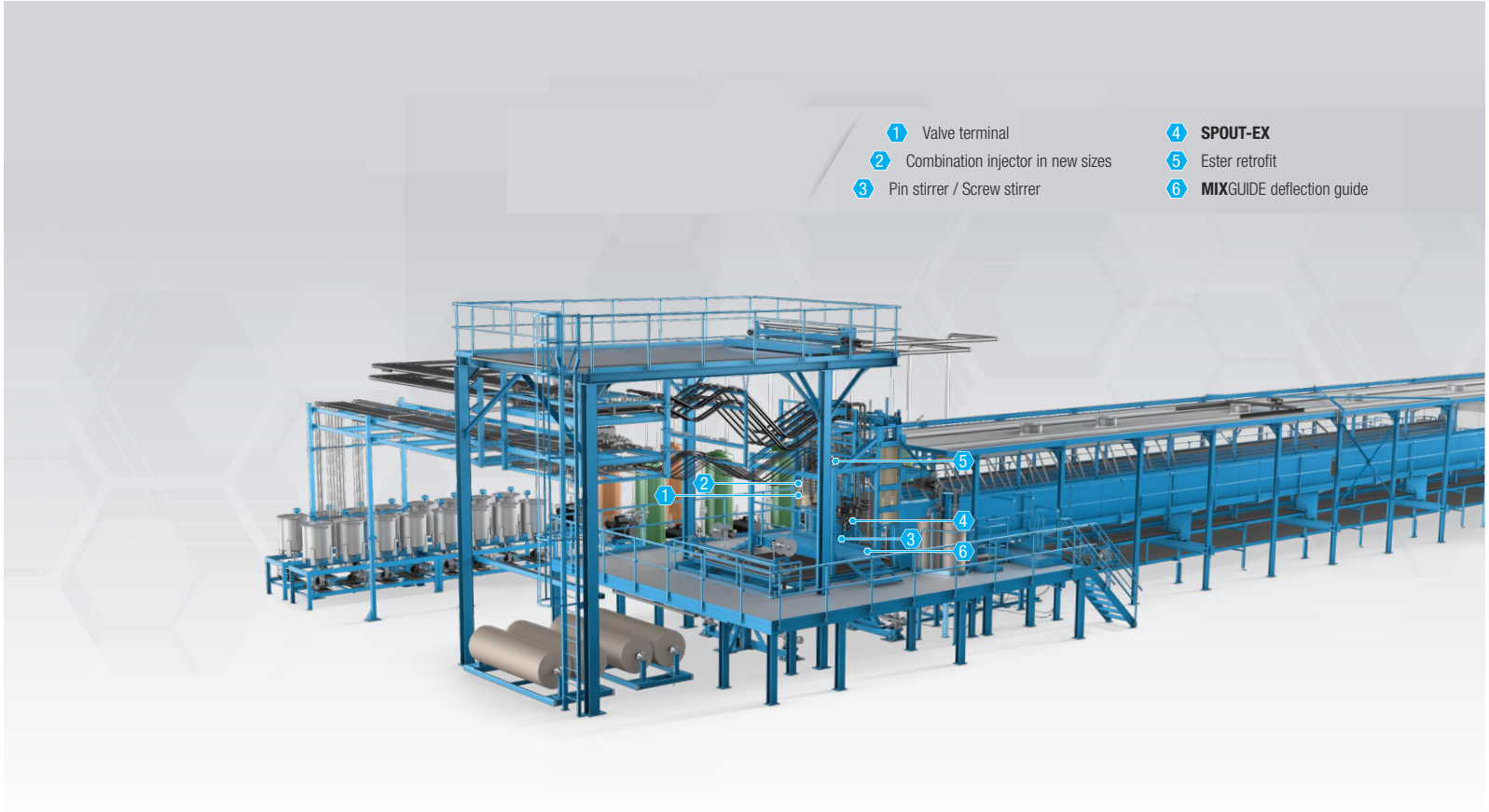

TYPICAL RETROFIT PACKAGES AND INNOVATIONS

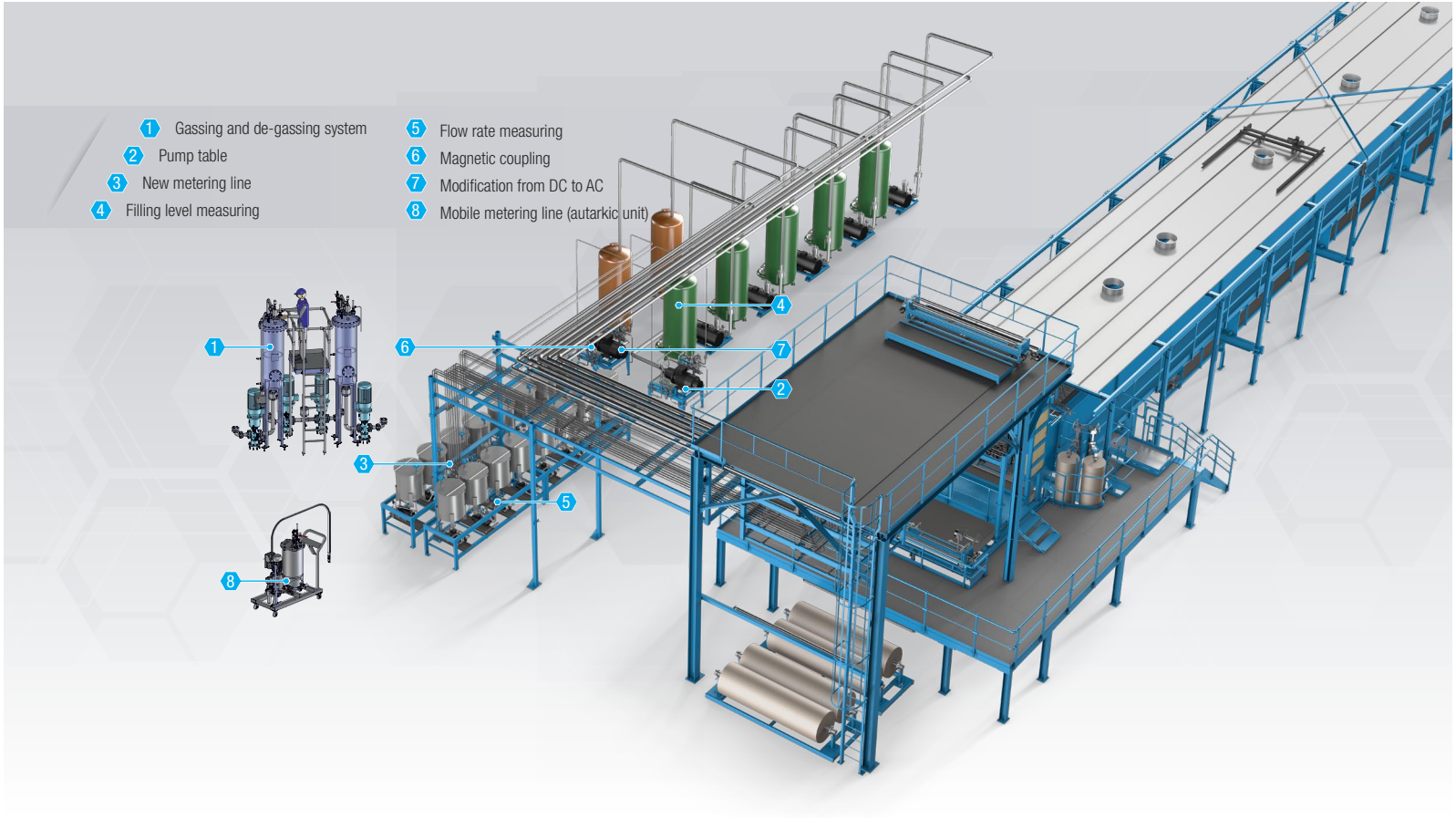

TYPICAL RETROFIT PACKAGES AND INNOVATIONS

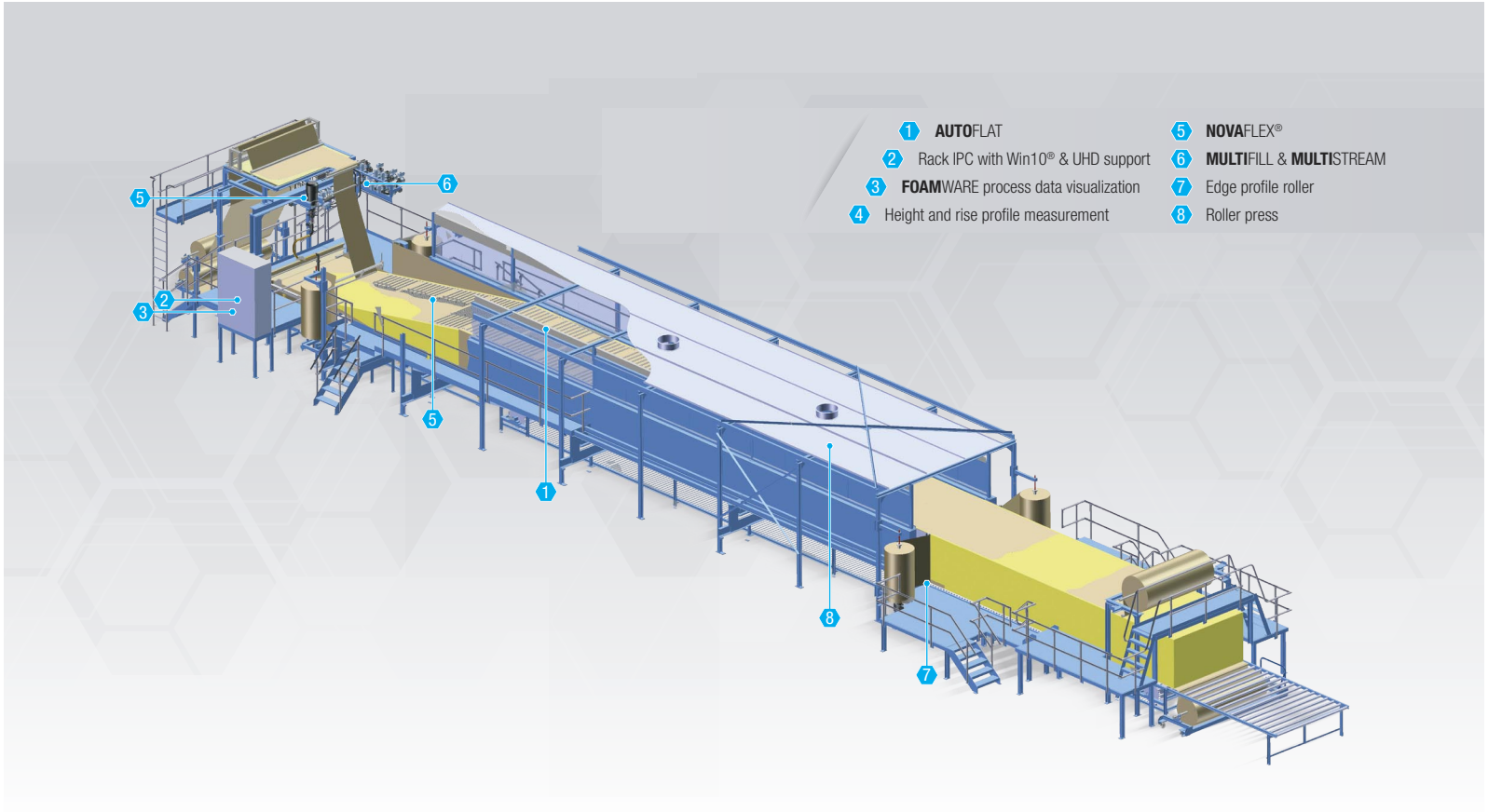

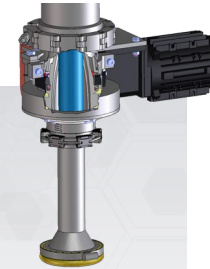

SPOUT-EX

- **Development status:** Coming soon
- **Short description:** Enhancement of mixing chamber throttle to prevent pinholes
- **Product group:** All types of slabstock except NOVAFLEX® foams
- **Machine group:** UBT, QFM, MULTIFLEX, SMARTFLEX
- **Benefits:** Significant improvement in foam quality through visibly fewer pinholes

  Up to more than 50% reduction in pinholes leads to increased competitiveness

  Possible entry into new markets by outperforming quality standards

Gassing and degassing system

- **Development status:** Ready
- **Short description:** A tank system for gassing and degassing isocyanate which allows extremely variable cell control
- **Product group:** All types of slabstock
- **Machine group:** UBT, QFM, MULTIFLEX, SMARTFLEX
- **Benefits:** Defined cell control, also for producing extremely fine and coarse celled foam products

  Stable and consistent reproducibility of foam outputs

  Highest quality foam slabs for exponential increase in competitiveness

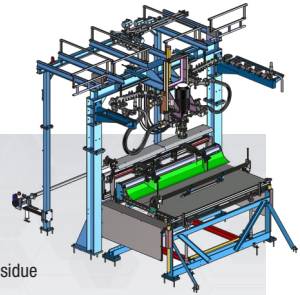

MIXGUIDE deflection plate

- **Development status:** Coming soon
- **Short description:** Flexible barrier to prevent foam residue and ageing foam parts
- **Product group:** All types of slabstock except NOVAFLEX® foams
- **Machine group:** QFM, MULTIFLEX
- **Benefits:** Significant improvement in foam quality by preventing ageing foam parts from entering the foam

  Homogenous and residue-free foam distribution prevents hardening lines, resulting in a significantly better look, feel and improvement in physical properties

Mobile metering line (autarkic unit)

- **Development status:** Ready
- **Short description:** Improve raw material diversity through additional mobile pump lines for greater flexibility
- **Product group:** All types of slabstock
- **Machine group:** UBT, QFM, MULTIFLEX, SMARTFLEX
- **Benefits:** Greater market penetration due to enlarged product portfolio

  Ultimate flexibility through mobile metering lines to connect to different machines

  Risk-free and economical testing of new raw materials without intervention in existing plant

New metering line

- **Development status:** Ready
- **Short description:** Extend product diversity through additional metering lines for poly, iso and additives
- **Product group:** All types of slabstock
- **Machine group:** UBT, QFM, MULTIFLEX, SMARTFLEX
- **Benefits:** Greater market penetration due to enlarged product portfolio

  Open up new markets due to innovative changes to existing formulations

  Price savings through extending existing formulation and flexible selection of new raw materials

FOAMWARE

- **Development status:** New, coming 2020
- **Short description:** Plant control with new plug-in concept to build your own dashboard
- **Product group:** All production lines with industrial PC's
- **Machine group:** UBT, QFM, MULTIFLEX
- **Benefits:** Greater flexibility

  Greater user capacity

  State-of-the-art monitoring and visualization

Performance rack IPC with Win10®

- **Development status:** Ready
- **Short description:** New industrial rack PC with Win10® and UHD support
- **Product group:** All production lines with industrial PC's
- **Machine group:** UBT, QFM, MULTIFLEX
- **Benefits:** State-of-the-art PLC component
  Ensures supply of spare parts
  Higher performance and greater safety

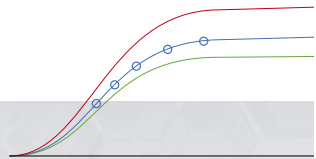

Rise profile measurement

- **Development status:** Ready
- **Short description:** Recording the rise profile of the foam and benchmarking with formulation history
- **Product group:** All continuous slabstock applications
- **Machine group:** UBT, QFM, MULTIFLEX, SMARTFLEX
- **Benefits:** More control of product quality
  Easy monitoring of rise profile
  Fast intervention in the process

Flat-Top system

- **Development status:** Ready
- **Short description:** Slab growth regulated by flat-top system
- **Product group:** All continuous slabstock applications
- **Machine group:** UBT, QFM, MULTIFLEX, SMARTFLEX, competitor
- **Benefits:** Less waste by controlling slab expansion

  A plus in operational safety

  Cost-efficient with a return on investment in under 1 year

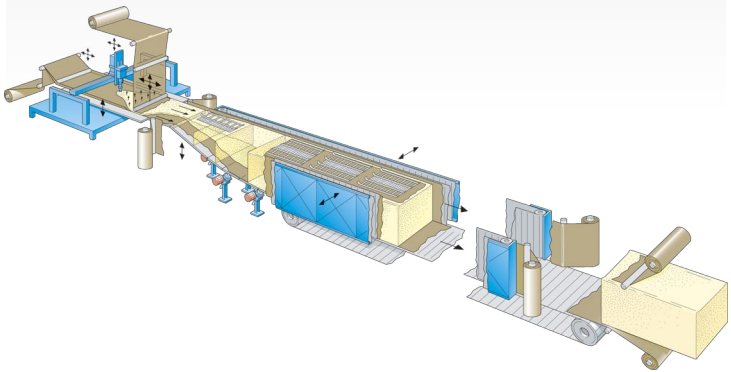

AUTOFLAT

- **Development status:** Coming soon
- **Short description:** Slab growth regulated by more user-friendly flat-top system with higher performance
- **Product group:** All continuous slabstock applications
- **Machine group:** UBT, QFM, MULTIFLEX, SMARTFLEX, competitor
- **Benefits:** Less waste by controlling slab expansion

  A plus in operational safety and higher performance

  More comfortable and user-friendly due to automatic adjustment depending on formulation

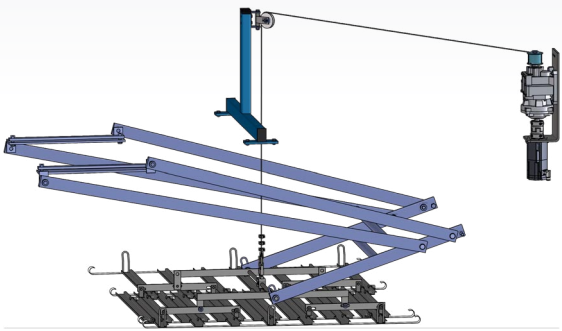

360° SERVICE

Comprehensive services for an efficient production

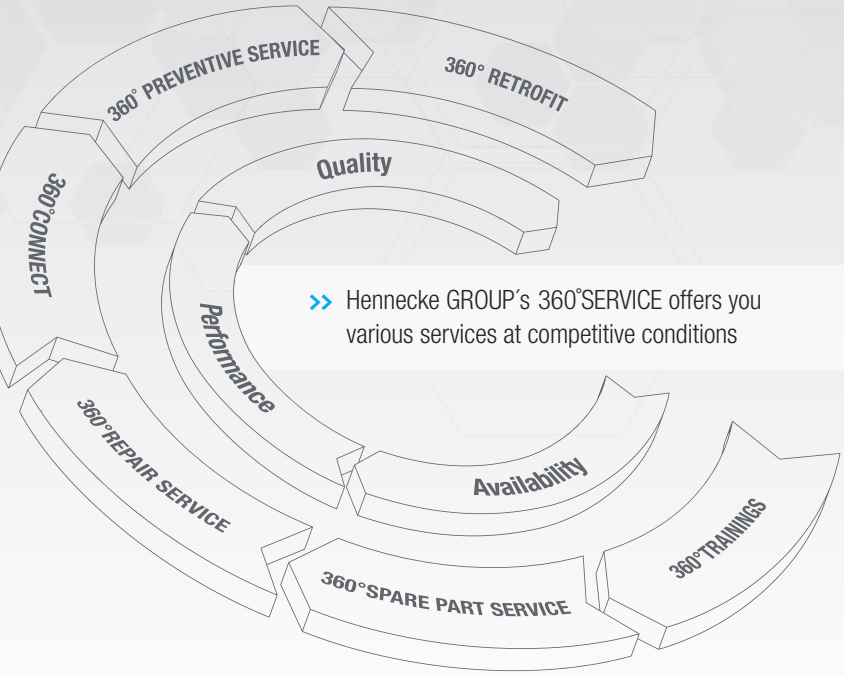

>> Hennecke GROUP´s 360°SERVICE offers you various services at competitive conditions

Around the clock, around the world, all around your production needs

For more than half a century, Hennecke GROUP has stood for high-performance machine and plant technology for polyurethane processing. With us, users around the world achieve high-quality and efficient production results.

The same applies when it comes to getting the right support for your production line or providing your staff with qualified training. Our 360°SERVICE offers customers different services at competitive prices. Each user has access to a tailor-made package of measures which ensures the highest degree of plant availability.

Does your company use Hennecke machine and plant technology? Why not opt for maximum support? This ensures that your machine or plant will be in top operational condition for a long time to come.

Efficiency in polyurethane processing means above all: being and staying competitive

Only companies that constantly increase their efficiency will be successful on the market in the long term. In a more and more globalized economy, customers expect top-quality production results, strict compliance with deadlines and a low price level. This apparent contradiction can only be overcome by an efficient production. Hennecke GROUP´s machine and plant technology comes with the necessary equipment right from the factory to meet the various requirements. The possibility of combining selected modules from the 360°SERVICE portfolio ensures the customer maximum efficiency - especially when it really matters.

Fit for PUR

Our 360°TRAININGS program offers professional and practice-oriented courses and seminars at competitive prices. The main focus is on how to use Hennecke GROUP´s machine and plant technology properly as well as on targeted and successful troubleshooting.

We make sure that you and your staff can make best use of the performance potential of Hennecke GROUP technology. In other words, we make you fit for PU processing at the highest level.

- Customer-specific training and comprehensive courses in process engineering, control technology and quality assurance
- Safety and confidence of your staff in operating machines and plants
- Effective increase in work quality and productivity
- Optimization of production and reduction of maintenance costs

360° SPARE PART SERVICE

Spare parts competence from a single source

An effective way of preventing costly production losses right from the start is to use original spare parts with manufacturer's warranty. Save yourself the search for alternative spare parts suppliers - our 360°SPARE PART SERVICE is not only attractive because of reliable availability and fast delivery but especially because of the favourable price-performance ratio.

Opt for intelligent spare part management with qualified advice from a single source. The concrete result? Maximum uptime!

- The majority of our spare parts is on the way to you within 24 hours
- Benefit from individual spare part packages in different sizes
- Qualified support thanks to our 360°Service hotline where orders can be placed until late at night
- Tailor-made seal and repair kits from our central spare parts store or the worldwide 360°SERVICE network

360° REPAIR SERVICE

Fast, reliable, professional

The operational life of machines and systems can often be significantly extended by upgrading various components cost-effectively.
Our 360°REPAIR SERVICE offers a wide range of components on a hire basis at attractive prices. This changes nothing in the performance, which remains as perfect as ever.

The 360°REPAIR SERVICE is also attractive for other reasons apart from the comprehensive fault management. It minimizes the risk of unplanned system outages, for example, thanks to precautionary measures or good guidance of users.

- Individual efficiency audits as a basis for all repairs
- Comprehensive fault management
- Prevention of plant downtimes during repairs
- Extensive range of repairs at fixed prices

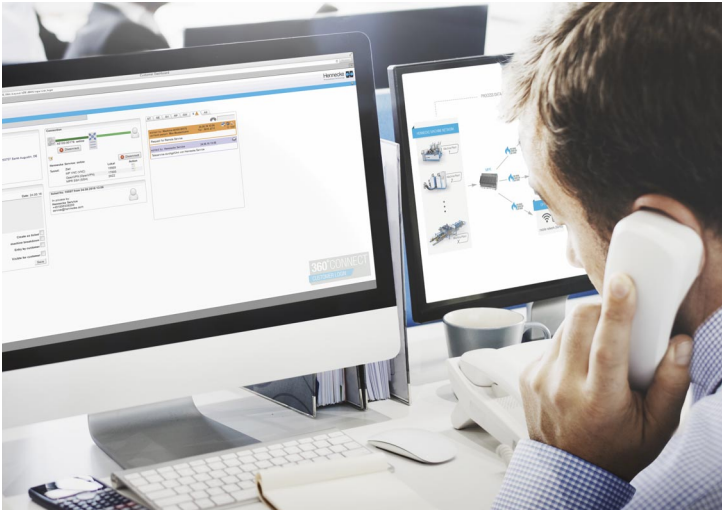

Qualified support, remote service and process monitoring

With 360°CONNECT, the expertise of our technical service support specialists is available to our customers worldwide, directly and without time-consuming travels. Thanks to modern digital infrastructure, our qualified and extensive support services are only a few clicks away. Based on a constantly secured data connection, we offer you, for example, various tools for production or process monitoring. This also includes targeted isolation of possible problems or faults in the production process.

With the browser-based 360°SERVICE customer portal, Hennecke GROUP customers also benefit from a well-developed ticket management system and can access the current version of the machine or plant documentation at any time.

- First-level support around the clock, 365 days a year
- Second-level support from specialists at the company headquarters
- Decentralized service technicians for fast and professional local support

360° PREVENTIVE SERVICE

Optimize production minimize risks

With our 360°PREVENTIVE SERVICE, you can optimize your production with transparent fixed costs and at the same time minimize a great number of risks. The preventive measures include regular production inspections.

Our 360°PREVENTIVE SERVICE will extend your plant's service life and effectively reduce your staff's workload.

- Individual inspection plans are part of our Hennecke Service Inspection (HSI) scheme
- Monitoring of all the relevant parameters including maintenance and cleaning work
- Detailed readjustment and optimization for improved machine performance
- Individual production assistance including safety and productivity audits
- Tailor-made maintenance contracts for your machinery

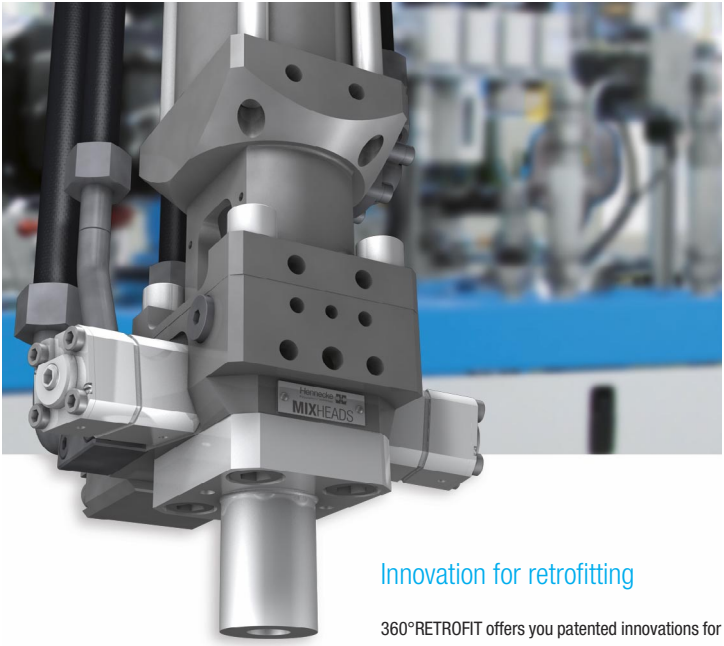

- Innovative and useful retrofit solutions for many applications
- Convincing production results and maximum efficiency thanks to state-of-the-art technology
- Higher uptime and less expenditure on service personnel

Innovation for retrofitting

360°RETROFIT offers you patented innovations for fast and simple retrofitting. This will efficiently optimize your machine's performance and ensure your production many more decisive advantages at an extremely attractive price-performance ratio.

Our 360°RETROFIT service is continuously improved with further innovative measures for retrofitting, where efficiency and customer benefit are the key. This is about more than a spare part – it's about innovation for retrofitting.

Around the world

Our international contact addresses

We have a global network of regional agencies and contacts which allows us to provide services and support in other countries too.

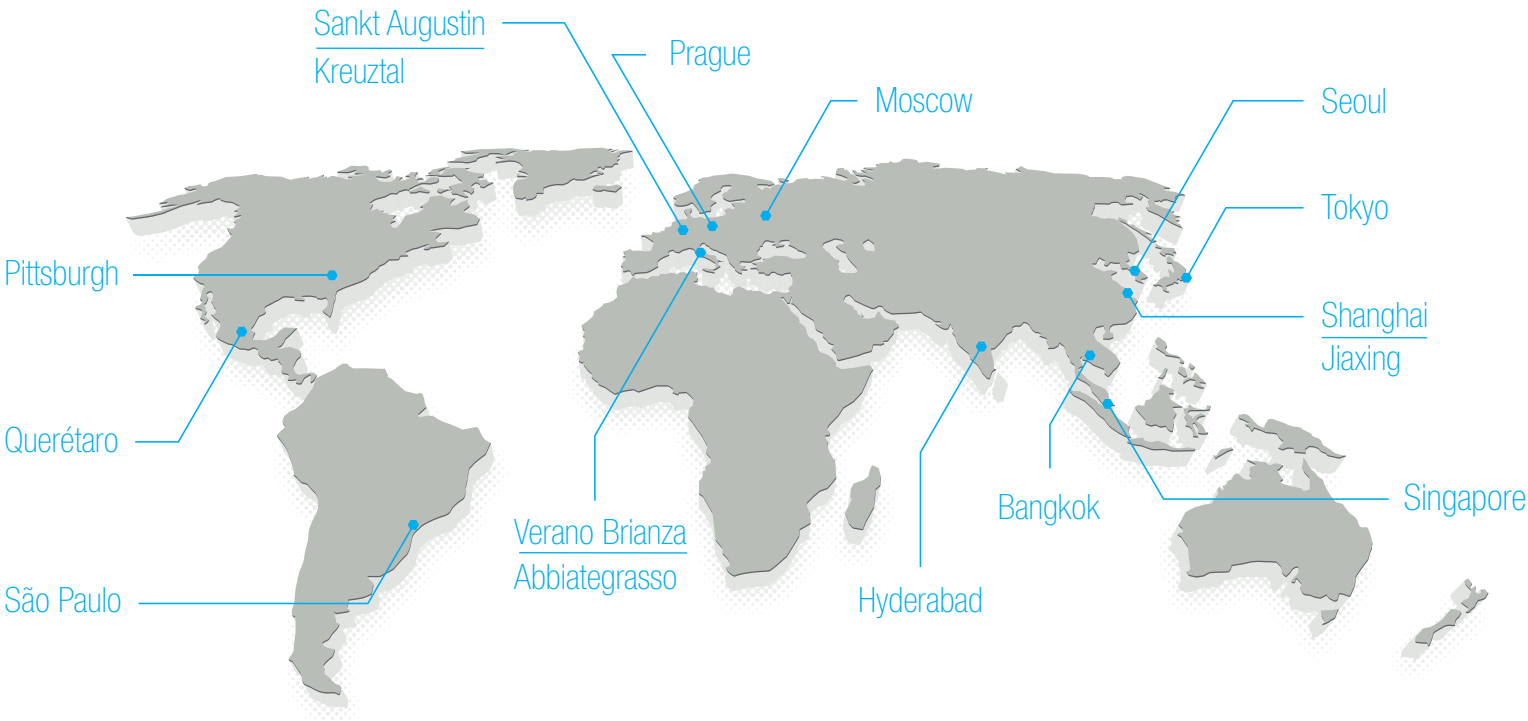

360° service

24H GLOBAL FIRST-LEVEL SUPPORT

+49 2241 339 360

SERVICEPORTAL

service.hennecke-group.com

CONTACT / REQUEST

service.hennecke-group.com/contact

Copyright 2019 Hennecke GmbH. All rights reserved. No part of this publication may be reproduced without prior written permission of the publisher. The information in this brochure is given in good faith, however without engagement. Design subject to alterations. The illustrations and photos in this brochure do not reflect the scope of supply!

500 DMA 12/19 REPLIC // SG 12.1

Hennecke GmbH · Birlinghovener Str. 30 · 53757 Sankt Augustin (Germany)
See www.hennecke-group.com for worldwide locations